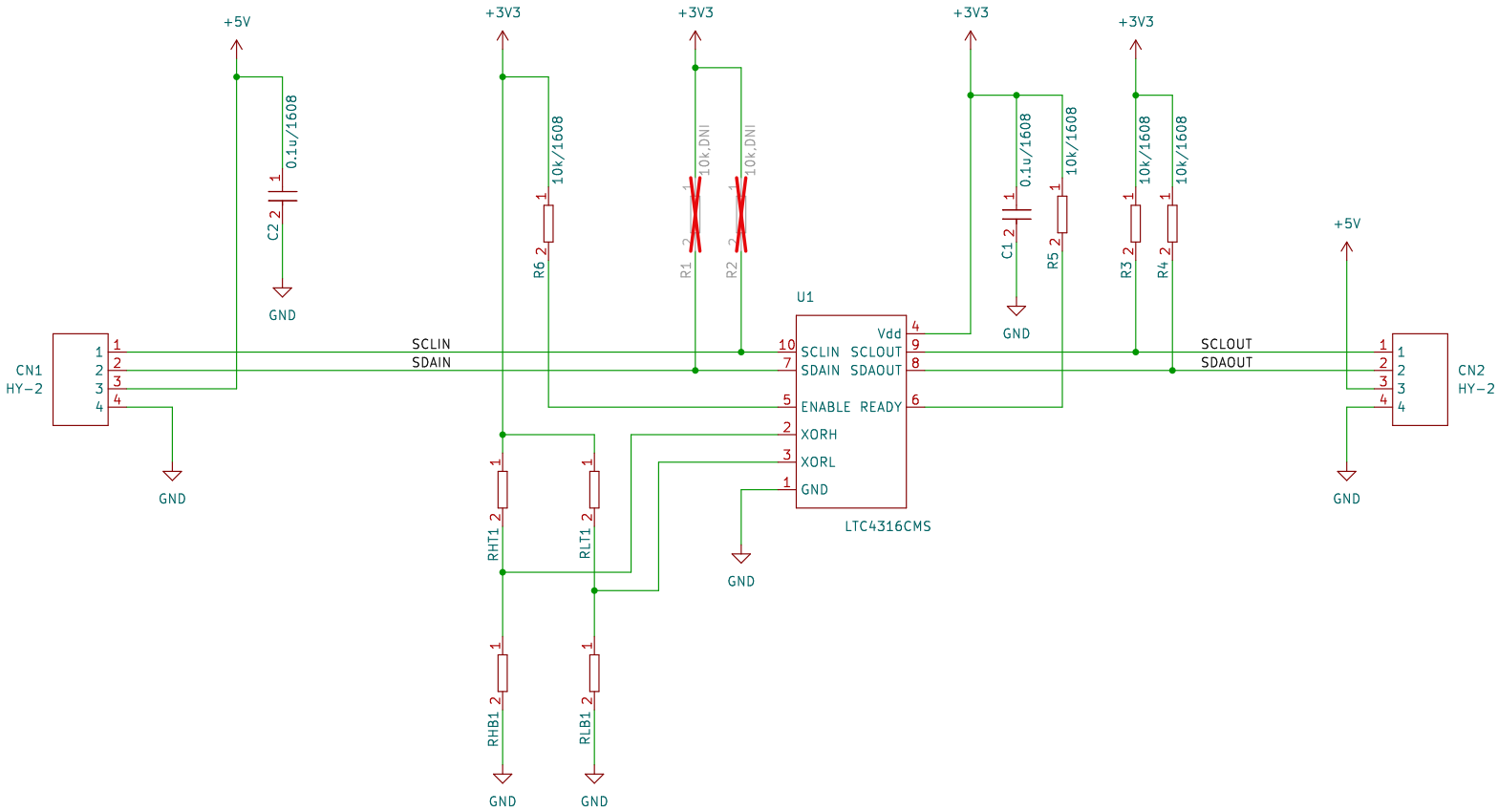
+5V
+3V3
+3V3
+3V3
+3V3
+5V
0.1u/1608
C2
GND
10k/1608
R6
10k,DNI
R1
10k,DNI
R2
U1
Vdd
SCLIN SCLOUT
SDAIN SDAOUT
ENABLE READY
XORH
XORL
GND
LTC4316CMS
0.1u/1608
C1
GND
10k/1608
R5
10k/1608
R3
10k/1608
R4
CN1
HY-2
SCLIN
SDAIN
SCLOUT
SDAOUT
CN2
HY-2
RHT1
RLT1
RHB1
RLB1
GND
GND
GND
GND
GND
GND

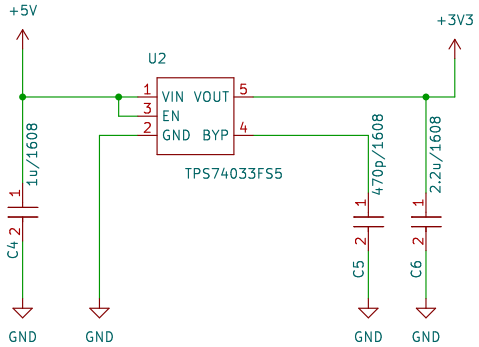
+5V
+3V3
U2
VIN VOUT
EN
GND BYP
TPS74033FS5
1u/1608
C4
470p/1608
C5
2.2u/1608
C6
GND
GND
GND
GND